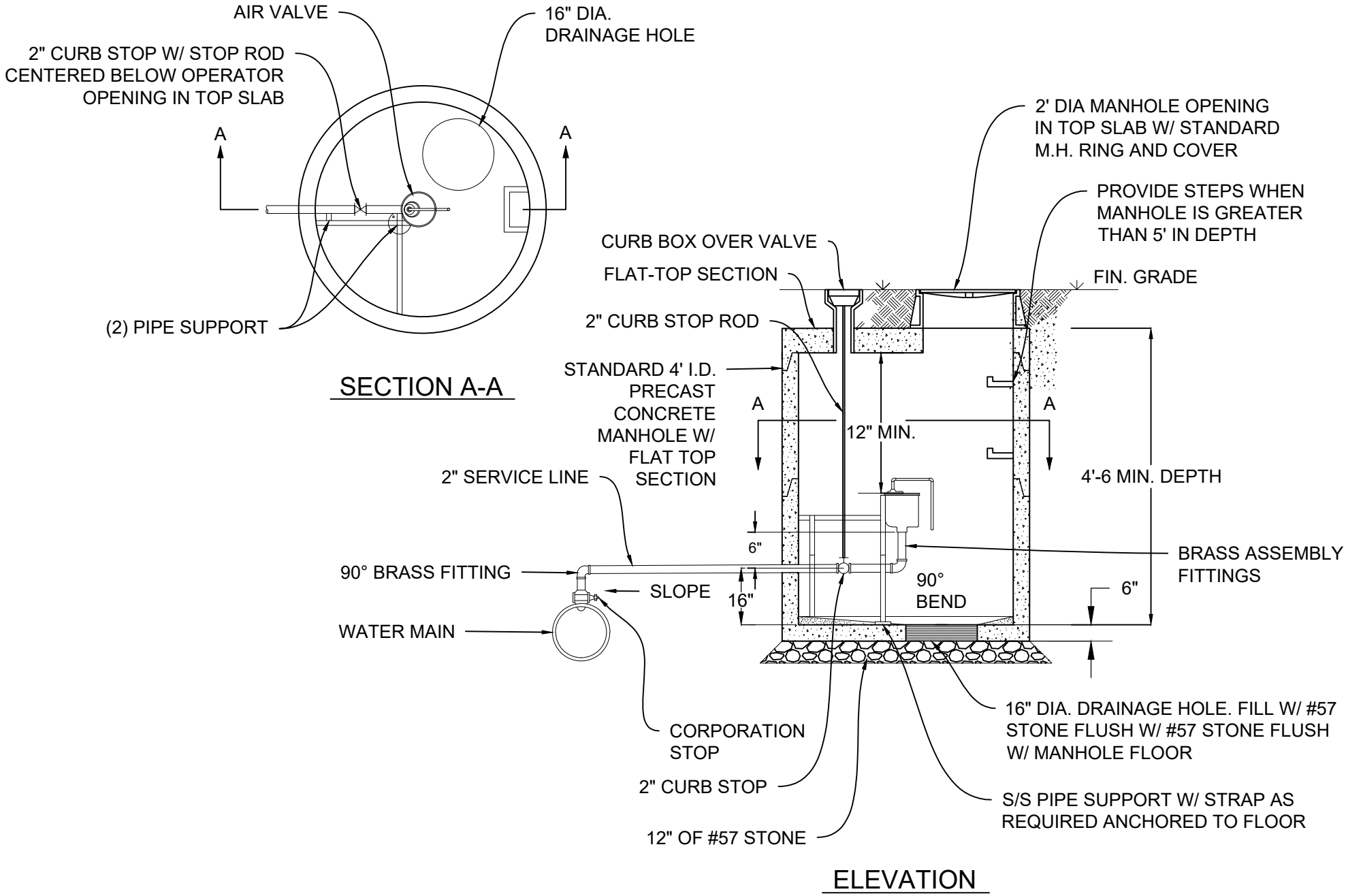

TOWN OF APEX STANDARDS	AIR RELEASE MANHOLE FOR WATER MAINS	STD. NO. 600.12
EFFECTIVE: MARCH 23, 2021		SHEET 2 OF 2